Universal-Transducer Multi-E11-MU

Safety Informations

Observe instructions!
The device described in these instructions shall only be installed by a qualified electrician according to both EN 50110-1/-2 and IEC 60364. Before startup, check the device for any damage that may have occurred during shipping. The device shall not be put into operation in the event of mechanical damage. Observe in the use of the device the applicable laws, standards and regulations. Only install this device in dry rooms. Do not install the devices on or in the vicinity of easily flammable materials. Improper use and failure to follow these instructions for use will render the warranty or guarantee null and void. The device is maintenance-free when used correctly.

Warning! Protection against electric shock.
For applications with high working voltages, take measures to prevent accidental contact and make sure that there is sufficient distance or insulation between adjacent devices! High voltage can cause electric shock or burns. Switch off all power to the device prior to performing any installation, repair or maintenance work.

Caution!
Be sure to take protective measures against electrostatic discharge (ESD).

The devices must be disposed of a proper manner!
More information at www.mueller-ziegler.de.

Conformity

The device conforms to the requirements of the EMC Directive 2014/30/EU, the Low Voltage Directive 2014/35/EU, as well as the RoHS Directive 2011/65/EU.
Components of the product contain the following substance > 0.1 mass percent of the candidate list (SVHC) according to REACh Regulation 1907/2006: Lead, CAS No 7439-92-1, EC No 231-100-4.

Application

The measuring converter Multi-E11-MU serves for the simultaneous conversion and separation of current, voltage, frequency, active power, reactive power, apparent power and the power factor with sinusoidal shape of curve in 11 load independent direct current and direct voltage signals. The measurement is possible in alternating current systems and three or four wire three phase alternating current systems with equal or any other loading. The 29 quantities being measured can be displayed, stored and configured through an 10MBits/s Ethernet LAN interface on the PC. The internal memory of the transmitter, up to 13,000 measured values can be stored. Furthermore, you can show the measurement results via a web browser or via HTTP-, TCP/IP- or Modbus TCP-protocol to process and read. Two further outputs can be used as limit values or impulse outputs. The switching status of the limit value outputs or impulse outputs is indicated over two LED's.

Function

The parameters to be measured pass over current and voltage converters to a 22 bit AD-converter with a sampling frequency of >20 kSPS. A microcontroller calculates the values required for the outputs from the values picked up. The output values for current and voltage are effective values. The frequency is calculated from the period of the voltage signal of the phase L1. The effective power values are calculated from the products of the sensed values of current and voltage of the three phases. The reactive power of the three phases is calculated with the products of the sensed values of the currents and the 90°-shifted voltage signals. The apparent power is the sum of the products from the three effective values of current and voltage. The power factors are calculated from the apparent powers and the effective powers.
The output amplifier delivers load independent direct current and direct voltage signals. The output signals are galvanically separated from the input signals and the auxiliary voltage, but they are connected to one another through a common grounded wire. The outputs are no load and short circuit proof. The two limit values or impulse outputs are galvanically separated from all inputs and outputs and from the auxiliary voltage. An auxiliary voltage is required.

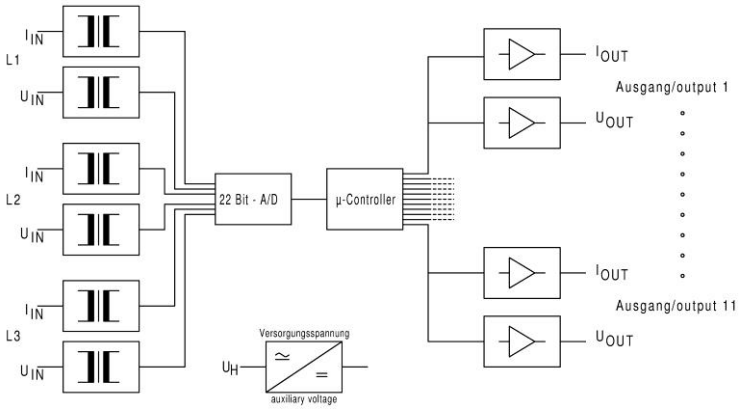

Technical Data

Input Data	
Input variable	alternating current, alternating voltage, frequency, active power, reactive power, apparent power and power factor in the alternating current system, four wire and three wire three phase alternating current systems with equal or any other loading, one or two sided energy directions, configurable
Rated current	2 A and 6 A
Current range	0,3-10 A, configurable
Rated voltage	100 V … 750 V
Voltage range	40-750 V, configurable
Rated frequency	50 Hz
Frequency range	40-80 Hz
Energy consumption	for each current path 0.06 VA at 1 A, 0.3 VA at 5 A for each voltage path 0.02 VA at 100 V, 1 VA at 750 V
Overload permanent	voltage max 750 V, current max. 12 A
High surge load	voltage 1000 V 1 s, current 240 A 1 s
Output Data	
Analog outputs	0-10 mA, 0-20 mA, 4-20 mA, -20 – 0 – 20 mA/0-500 Ohm load **and** 0-5 V, 0-10 V, 2-10 V, -10 – 0 – 10 V/ max. 13 mA load resolution 12 Bit, outputs configurable, 4 x unipolar/bipolar, 7 x unipolar, if both outputs are used simultaneously, the maximum load on the voltage output is 1 mA, Imax < 40 mA, Umax < 24 V
Load influence	nein
Residual ripple	< 100 mVss

Limit value / pulsed outputs	open collector (npn-transistor), 5-30 VDC, max. 40 mA pulse length approx. 40 ms (pause >100 ms) hysteresis approx. 4 % of set value accuracy +/- 1 % of full scale
Caution!	The valence of the pulses must be divided by the transmission ratio (K_N) of the current and voltage transformer used!
Auxiliary voltage	
	60-265 V AC + DC, 9 VA **or** 10-30 V AC + DC, 9 VA
General Data	
Accuracy	+/- 0,5 % of full scale (with power factor +/- 0,5 % in the range >25 % of the apparent power S = U x I_{nom} x 1,732, with apparent power <25 %, the accuracy is +/- 1 %, below 10 % of apparent power, power factor is not measured
Current influence	< 0,5 % with 0,15-fold to 2-fold rated current
Frequency influence	< 0,3 % within frequency range
Phase angle influence	< 0,5 % with +/- 90°
Response time	approx. 200 ms (power factor approx. 600 ms)
Indicators	**green LED**: functional test (fast flashing → equipment functions correctly) **red LED**: shine if limit values G1 or G2 are reached and/or at impulse output
Interface	10 Mbits/s Ethernet LAN-interface
Caution!	**The Ethernet LAN interface is galvanically connected to the outputs!**
Fuse	The auxiliary voltage connection is protected in the device with a 1 A fuse.
Calibration	The measuring transducer is calibrated in the factory. A new calibration should be done every 2 years in the manufacturers factory.
Operation temperature	-15 to +20 to +30 to +55 °C
Storage temperature	-25 … +85 °C
Temperature influence	< 0,2 % at 10 K
Ambient conditions	stationary application, weather protected, rel. air humidity 5 … 95 %, no condensation, altitude up to 2000 m, water, rain, snow or hail excluded
Test voltage	4 kV, 50 Hz output against auxiliary voltage, 2 kV, 50 Hz output against limit value / pulsed output 5,2 kV, 50 Hz input against output, input against auxiliary voltage
EMC	EN 61326
Mechanical strength/ Electrical safety	EN 61010-1, housing insulated, protection class II, for working voltages up to 600 V (phase to neutral) pollution degree 2, measuring category CAT III
Accuracy, overload	EN 60688
Connection	DIN 43807
Ingress protection	EN 60529 housing IP30, terminals IP20
Installation	snap on mounting on top hat rail 35 mm (EN 60715) The equipment is suitable for tight on tight assembly, however, with ambient temperatures of >45 °C a distance apart of 10 mm is recommended. The assembly location should if possible be free from vibration.
Terminals	screw terminal max. 4 mm², tightening torque 0,8 Nm
Housing material	polycarbonate PC/polyamide PA, self-extinguishing to UL 94 V-0
Weight	850 g

Dimensions

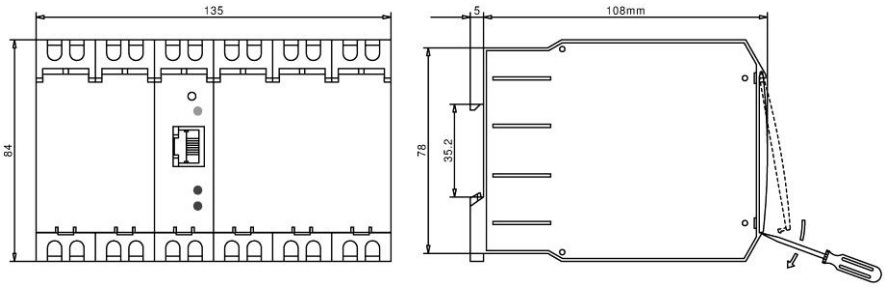

Configuration

The measuring converter is configured in works if the necessary data is known. The equipment can be reconfigured at any time. It is only necessary to have the corresponding software for this (download under https://www.mueller-ziegler.de/downloads/) and a PC. The measuring converter and the PC should be connected by means of a LAN cable (accessory). The auxiliary voltage must be connected to the measuring converter. Enter the default IP address of the Multi-E11-MU (192.168.2.2 or "Multi-E11-MU", see product label) in your browser. Use this website to adjust the Multi-E11-MU network settings for your network. Please ask your network administrator for the required information. Access to the network configuration and DynDNS is password protected. You may change the username and the password in the settings. The default user name is "admin" and the default password is "123multi". With another website, the measured values are indicative and the Multi-E11-MU can be connected to the internet via DynDNS.

The different configuration possibilities of the inputs and outputs are program conducted. The software can be downloaded from https://www.mueller-ziegler.de/downloads/. To reset to the factory settings follow the steps below:

1. press the "RESET"-button for 5 seconds
2. when "ok" LED lights up release "RESET" button
3. reset to factory settings is complete.

Connection

Limit value or impulse G1 and G2

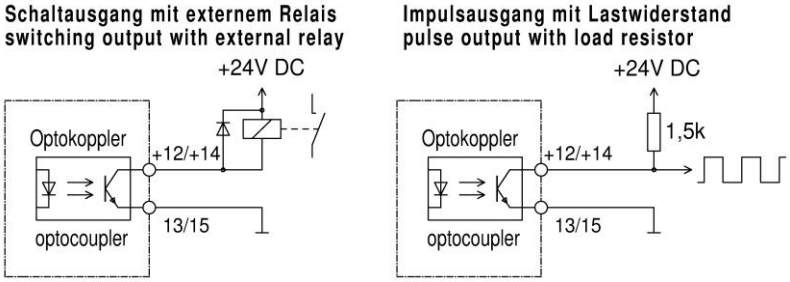

3-/ 4- wire three phase alternating current of any load (inputs and outputs that are not used remain unconnected)

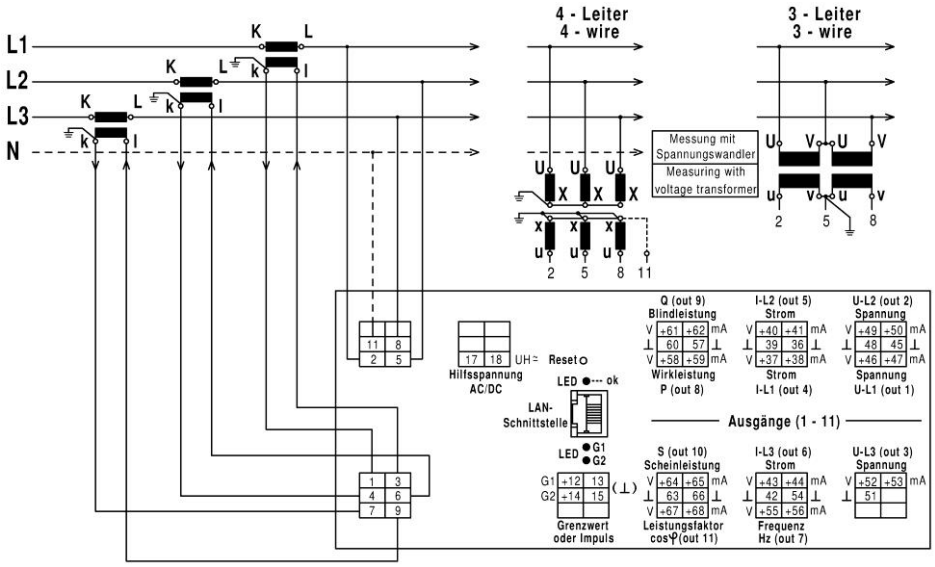

3- wire three phase alternating current of any load (inputs and outputs that are not used remain unconnected)

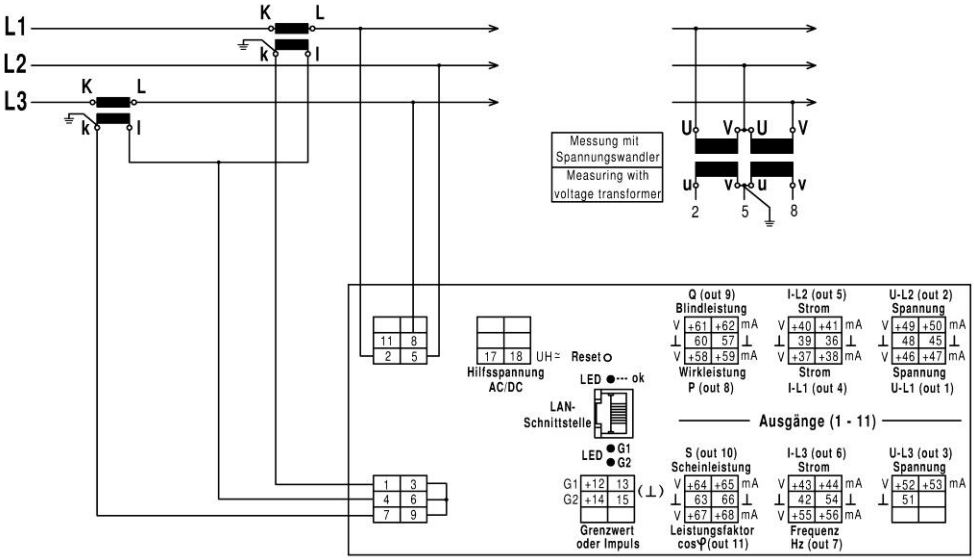

3-/ 4- wire three phase alternating current of same load (inputs and outputs that are not used remain unconnected)

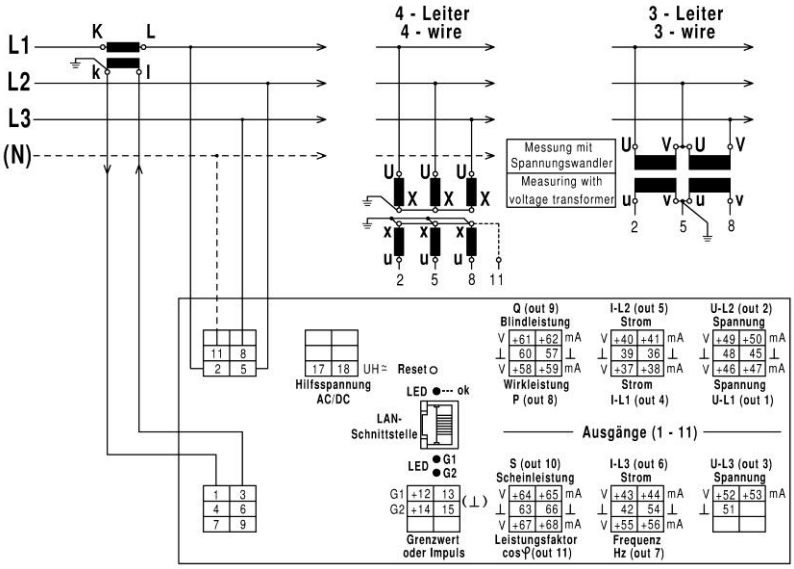

alternating current (inputs and outputs that are not used remain unconnected)

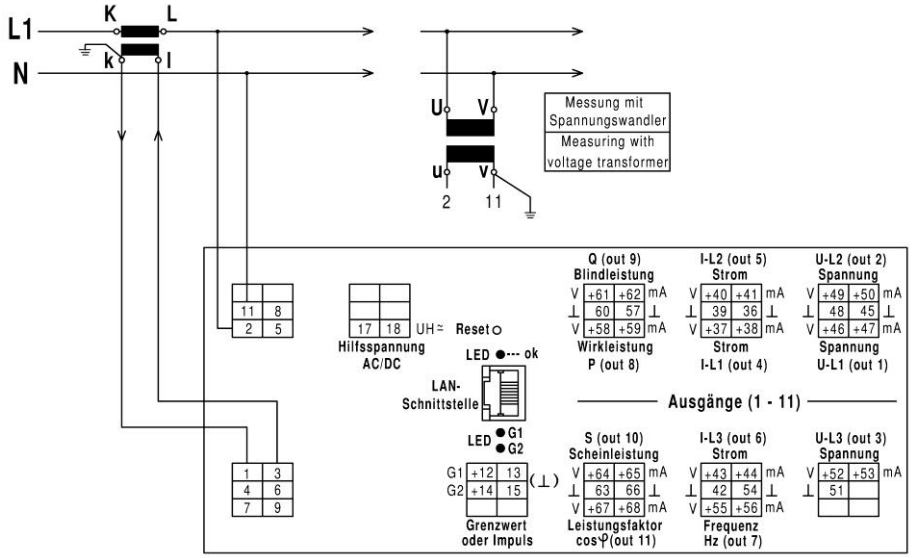

Important! When taking alternating current measurements, the voltage must be connected to terminals 2 and 11 and the current to terminals 1 and 3.

Website Messwerte / Measured values

This web site allows you to display the measured values of the Multi-E11-MU. It is possible to adjust the interval in which the measured values are updated. Measuring is started with the "Start measured" button and stopped with the "Stop measured" button or by leaving the web site. The energy counters are reset with the "Reset kWh / kvarh" button.
The measured values can also be saved in the measuring transformer's internal memory. Up to 13,000 series of measurements can be stored. Saving of the measured values is started with the "Save values" button. Measurement is stopped with the "Stop Saving" button. The selected time interval “Save Intervall” determines the interval between saving of the measured values. The measured values are saved in file "value.csv". Always only one measured value file can be saved. Upon restarting the recording of measured values, the old measured values are overwritten. No further measurements are saved when all the available memory has been used up. The file can be downloaded by using the download link. All measured values are saved in ASCII format along with the associated unit. Individual measured values are separated by the semicolon sign (0x3B), and series of measurements by the "CR/LF" character (0x0D, 0x0A). The last character in the file is a blank (0x00). Decimal places in the measured values are indicated with a dot (0x2E). By virtue of the ASCII format and semicolon-separation of values, it is very easy to further process the measured values. The arrangement of the measured values in the file is as follows:

Arrangement of the measured values

value	bytecount	possible values
time stamp	13	0000:00:00
measured value voltage L1-N/L1-L2	5	
unit voltage L1-N/L1-L2	1	V
measured value voltage L2-N/L2-L3	5	
unit voltage L2-N/L2-L3	1	V
measured value voltage L3-N/L3-L1	5	
unit voltage L3-N/L3-L1	1	V
measured value current L1	6	
unit current L1	2	mA, A
measured value current L2	6	
unit current L2	2	mA, A
measured value current L3	6	
unit current L3	2	mA, A
measured value frequency	5	
unit frequency	2	Hz
measured value active power L1	6	
unit active power L1	2	W, kW, MW
measured value active power L2	6	
unit active power L2	2	W, kW, MW
measured value active power L3	6	
unit active power L3	2	W, kW, MW

measured value active power sum	6	
unit active power sum	2	W, kW, MW
measured value reactive power L1	6	
unit reactive power L1	4	var, kvar, Mvar
measured value reactive power L2	6	
unit reactive power L2	4	var, kvar, Mvar
measured value reactive power L3	6	
unit reactive power L3	4	var, kvar, Mvar
measured value reactive power sum	6	
unit reactive power sum	4	var, kvar, Mvar
measured value apparent power L1	6	
unit apparent power L1	3	VA, kVA, MVA
measured value apparent power L2	6	
unit apparent power L2	3	VA, kVA, MVA
measured value apparent power L3	6	
unit apparent power L3	3	VA, kVA, MVA
measured value apparent power sum	6	
unit apparent power sum	3	VA, kVA, MVA
measured value cos phi L1	4	
unit cos phi L1	3	ind, cap
measured value cos phi L2	4	
unit cos phi L2	3	ind, cap
measured value cos phi L3	4	
unit cos phi L3	3	ind, cap
measured value cos phi sum	4	
unit cos phi sum	3	ind, cap
measured value kWh-counter / import	11	
unit kWh-counter / import	3	kWh
measured value kvarh-counter	11	
unit kvarh-counter	5	kvarh
operating hours	9	
unit operating hours	1	h
settings output G1	1	A, B, C, D, E, F, G, H, I, J, K, L, M, O, P *1
condition output G1	1	0, 1 *2
settings output G2	1	A, B, C, D, E, F, G, H, I, J, K, L, M, O, P *1
condition output G2	1	0, 1 *2
measured value kWh-counter / export (from serial number 0092)	11	
unit kWh-counter / export (from serial number 0092)	1	kWh

*1) Limit setting: A = Active energy, import (impulses output) at output G1 or reactive energy, inductive (impulses output) at output G2
B = Current L1
C = Current L2
D = Current L3
E = Voltage L1-N/L1-L2
F = Voltage L2-N/L2-L3
G = Voltage L3-N/L3-L1
H = Frequency
I = Active power, import
J = Active power, export
K = Reactive power, inductive

L = Reactive power, capacitive
M = Apparent power, import
N = Apparent power, export
O = Power factor cos phi, inductive
P = Power factor cos phi, capacitive

*2) The 0 means limit off while 1 means limit on

Measured value queries with the TCP/IP-protocol

The 29 measured values of the Multi-E11-MU can be read out using the TCP/IP protocol. Use a LAN cable to connect the measuring transformer to your PC. Open a TCP/IP client on your PC. The addressing of the Multi-E11-MU is via its host name (e.g. 192.168.2.2 or e.g."Multi-E11-MU") and the port numbered 9760. Send a TCP/IP packet with the following hex values {0xBD 0x57}. The smallest interval for reading out the values should not be less than 50 ms. The data string with the measured values has a size of 301 bytes. All measured values are output in ASCII format along with the associated unit. Individual measured values are separated by the semicolon sign (0x3B). The last character in the file is a blank (0x00). Decimal places in the measured values are indicated with a dot (0x2E). By virtue of the ASCII format and semicolon-separation of values, it is very easy to further process the measured values. The arrangement of the measured values in the data string is as follows:

Arrangement of the measured values

value	bytecount	possible values
measured value voltage L1-N/L1-L2	5	
unit voltage L1-N/L1-L2	1	V
measured value voltage L2-N/L2-L3	5	
unit voltage L2-N/L2-L3	1	V
measured value voltage L3-N/L3-L1	5	
unit voltage L3-N/L3-L1	1	V
measured value current L1	6	
unit current L1	2	mA, A
measured value current L2	6	
unit current L2	2	mA, A
measured value current L3	6	
unit current L3	2	mA, A
measured value frequency	5	
unit frequency	2	Hz
measured value active power L1	6	
unit active power L1	2	W, kW, MW
measured value active power L2	6	
unit active power L2	2	W, kW, MW
measured value active power L3	6	
unit active power L3	2	W, kW, MW
measured value active power sum	6	
unit active power sum	2	W, kW, MW
measured value reactive power L1	6	
unit reactive power L1	4	var, kvar, Mvar
measured value reactive power L2	6	
unit reactive power L2	4	var, kvar, Mvar
measured value reactive power L3	6	
unit reactive power L3	4	var, kvar, Mvar
measured value reactive power sum	6	
unit reactive power sum	4	var, kvar, Mvar
measured value apparent power L1	6	
unit apparent power L1	3	VA, kVA, MVA
measured value apparent power L2	6	

unit apparent power L2	3	VA, kVA, MVA
measured value apparent power L3	6	
unit apparent power L3	3	VA, kVA, MVA
measured value apparent power sum	6	
unit apparent power sum	3	VA, kVA, MVA
measured value cos phi L1	4	
unit cos phi L1	3	ind, cap
measured value cos phi L2	4	
unit cos phi L2	3	ind, cap
measured value cos phi L3	4	
unit cos phi L3	3	ind, cap
measured value cos phi sum	4	
unit cos phi sum	3	ind, cap
measured value kWh-counter / import	11	
unit kWh-counter / import	3	kWh
measured value kvarh-counter	11	
unit kvarh-counter	5	kvarh
operating hours	9	
unit operating hours	1	h
settings output G1	1	A, B, C, D, E, F, G, H, I, J, K, L, M, O, P *1
condition output G1	1	0, 1 *2
settings output G2	1	A, B, C, D, E, F, G, H, I, J, K, L, M, O, P *1
condition output G2	1	0, 1 *2
measured value kWh-counter / export (from serial number 0092)	11	
unit kWh-counter / export (from serial number 0092)	3	kWh

*1) Limit setting: A = Active energy, reference (impulses output) at output G1 or reactive energy, inductive (impulses output) at output G2
B = Current L1
C = Current L2
D = Current L3
E = Voltage L1-N/L1-L2
F = Voltage L2-N/L2-L3
G = Voltage L3-N/L3-L1
H = Frequency
I = Active power, import
J = Active power, import
K = Reactive power, inductive
L = Reactive power, capacitive
M = Apparent power, export
N = Apparent power, export
O = Power factor cos phi, inductive
P = Power factor cos phi, capacitive

*2) The 0 means limit off while 1 means limit on

Measured value queries with the HTTP protocol

The 29 measured values of the Multi-E11-MU can also be read out using the HTTP protocol, via the Internet for example. Connect the measuring transformer to your PC via a LAN cable or to the Internet via a router (using dynamic DNS, for example). Open a HTTP client on your PC. The addressing of the Multi-E11-MU is via its IP address or web address (e.g. "http://multi-e11-mu.dyndns.org/httpvalue.xml") and the request for file "httpvalue.xml". The measuring transformer's reply is a string containing the measured data. The smallest interval for reading out the values should not be less than 50 ms. The string with the measured values has a size of 301 bytes. All measured values are output in ASCII format along with the associated unit. Individual measured values are separated by the semicolon sign (0x3B). The last character in the file is a blank (0x00). Decimal places in the measured values are indicated with a dot (0x2E). By virtue of the ASCII format and semicolon-separation of values, it is very easy to further process the measured values. The arrangement of the measured values in the string is as follows:

Arrangement of the measured values

value	bytecount	possible values
measured value voltage L1-N/L1-L2	5	
unit voltage L1-N/L1-L2	1	V

measured value voltage L2-N/L2-L3	5	
unit voltage L2-N/L2-L3	1	V
measured value voltage L3-N/L3-L1	5	
unit voltage L3-N/L3-L1	1	V
measured value current L1	6	
unit current L1	2	mA, A
measured value current L2	6	
unit current L2	2	mA, A
measured value current L3	6	
unit current L3	2	mA, A
measured value frequency	5	
unit frequency	2	Hz
measured value active power L1	6	
unit active power L1	2	W, kW, MW
measured value active power L2	6	
unit active power L2	2	W, kW, MW
measured value active power L3	6	
unit active power L3	2	W, kW, MW
measured value active power sum	6	
unit active power sum	2	W, kW, MW
measured value reactive power L1	6	
unit reactive power L1	4	var, kvar, Mvar
measured value reactive power L2	6	
unit reactive power L2	4	var, kvar, Mvar
measured value reactive power L3	6	
unit reactive power L3	4	var, kvar, Mvar
measured value reactive power sum	6	
unit reactive power sum	4	var, kvar, Mvar
measured value apparent power L1	6	
unit apparent power L1	3	VA, kVA, MVA
measured value apparent power L2	6	
unit apparent power L2	3	VA, kVA, MVA
measured value apparent power L3	6	
unit apparent power L3	3	VA, kVA, MVA
measured value apparent power sum	6	
unit apparent power sum	3	VA, kVA, MVA
measured value cos phi L1	4	
unit cos phi L1	3	ind, cap
measured value cos phi L2	4	
unit cos phi L2	3	ind, cap
measured value cos phi L3	4	
unit cos phi L3	3	ind, cap
measured value cos phi sum	4	
unit cos phi sum	3	ind, cap

measured value kWh-counter / import	11	
unit kWh-counter / import	3	kWh
measured value kvarh-counter	11	
unit kvarh-counter	5	kvarh
operating hours	9	
unit operating hours	1	h
settings output G1	1	A, B, C, D, E, F, G, H, I, J, K, L, M, O, P *1
condition output G1	1	0, 1 *2
settings output G2	1	A, B, C, D, E, F, G, H, I, J, K, L, M, O, P *1
condition output G2	1	0, 1 *2
measured value kWh-counter / export (from serial number 0092)	11	
unit kWh-counter / export (from serial number 0092)	3	kWh

*1) Limit setting: A = Active energy, reference (impulses output) at output G1 or reactive energy, inductive (impulses output) at output G2
B = Current L1
C = Current L2
D = Current L3
E = Voltage L1-N/L1-L2
F = Voltage L2-N/L2-L3
G = Voltage L3-N/L3-L1
H = Frequency
I = Active power, import
J = Active power, import
K = Reactive power, inductive
L = Reactive power, capacitive
M = Apparent power, export
N = Apparent power, export
O = Power factor cos phi, inductive
P = Power factor cos phi, capacitive

*2) The 0 means limit off while 1 means limit on

Measured value queries with the MODBUS-TCP protocol

The measured values of the Multi-E11-MU can be read out using the MODBUS-TCP protocol. Connect the transmitter with a LAN cable to your PC or a router with the MODBUS master. The addressing of the Multi-E11-MU is via its IP address (Port 502). The smallest interval for reading out the values should not be less than 50 ms. The registers can only be read out. It supports the following Modbus commands:

Code: 0x03 Read Holding Registers
Code: 0x08 Diagnostic

For non-supported commands or incorrect address information, an appropriate error message is issued.

Formats
INT = 2 Byte, signed (high before low Byte)
UINT = 2 Byte, unsigned (high before low Byte)
LONG = 4 Byte, unsigned (high before low Byte, low Word before high Word)

Representation of voltage in the MODBUS-registers of the Multi-E11-MU
U = n x VT
U = voltage in V
n = value from MODBUS-Register
VT = ratio of voltage transformer (if present)

Representation of current in the MODBUS-registers of the Multi-E11-MU
I = n x CT
I = current in mA
n = value from MODBUS-Register
CT = ratio of current transformer (if present)

Representation of power in the MODBUS-registers of the Multi-E11-MU
N = n x CT x VT
N = power in W/var/VA
n = value from MODBUS-Register
CT = ratio of current transformer (if present)
VT = ratio of voltage transformer (if present)

Representation of cos phi in the MODBUS-registers of the Multi-E11-MU
Measurement value: 0,00 cap – 0,5 cap – 1,00 – 0,5 ind – 0,00 ind
MODBUS: -000 – -50 – 100 – 50 – 000

Measured values list

adress (hex)	value	format	unit	resolution
0x0001	measured value voltage L1-N/L1-L2	UINT	V	0,1
0x0002	measured value voltage L2-N/L2-L3	UINT	V	0,1
0x0003	measured value voltage L3-N/L1-L3	UINT	V	0,1
0x0004	measured value current L1	UINT	mA	1
0x0005	measured value current L2	UINT	mA	1
0x0006	measured value current L3	UINT	mA	1
0x0007	measured value frequency	UINT	Hz	0,1
0x0008	measured value active power L1	INT	W	1
0x0009	measured value active power L2	INT	W	1
0x000A	measured value active power L3	INT	W	1
0x000B	measured value active power sum	INT	W	1
0x000C	measured value reactive power L1	INT	var	1
0x000D	measured value reactive power L2	INT	var	1
0x000E	measured value reactive power L3	INT	var	1
0x000F	measured value reactive power sum	INT	var	1
0x0010	measured value apparent power L1	INT	VA	1
0x0011	measured value apparent power L2	INT	VA	1
0x0012	measured value apparent power L3	INT	VA	1
0x0013	measured value apparent power sum	INT	VA	1
0x0014	measured value cos phi L1	INT	-	0,01
0x0015	measured value cos phi L2	INT	-	0,01
0x0016	measured value cos phi L3	INT	-	0,01
0x0017	measured value cos phi sum	INT	-	0,01
0x0018	measured value kWh-counter / import	LONG	kWh	0,1
0x001A	measured value kvarh-counter	LONG	kvarh	0,1
0x001C	operating hours	LONG	min	1
0x001E	condition output G1	INT	0, 1 *2	
0x001F	condition output G2	INT	0, 1 *2	
0x0020	setting output G1	INT	0 - 15 *1	
0x0021	setting output G2	INT	0 - 15 *1	
0x0022	Current transformer, primary	INT	A	1
0x0023	Current transformer, secondary	INT	A	1
0x0024	Voltage transformer, primary	INT	V	1
0x0025	Voltage transformer, secondary	INT	V	1
0x0026 (from serial number 0092)	measured value kWh-counter / export	LONG	kWh	0,1
0x0028	serial number	UINT		1
0x0029	software version	UINT		x.x
0x002A	MAC-adress 1	UINT		X.X.x.x.x.x
0x002B	MAC-adress 2	UINT		x.x.X.X.x.x
0x002C	MAC-adress 3	UINT		x.x.x.x.X.X
0x002D	IP-adress	LONG		X.X.X.X

0x002F	subnet mask	LONG		X.X.X.X
0x0031	standard gateway	LONG		X.X.X.X

*1) Limit setting: 0 = Active energy, reference (impulses output) at output G1 or Reactive energy, inductive (impulses output) at output G2
1 = Current L1
2 = Current L2
3 = Current L3

4 = Voltage L1-N/L1-L2
5 = Voltage L2-N/L2-L3
6 = Voltage L3-N/L3-L1
7 = Frequency
8 = Active power, import
9 = Active power, import
10 = Reactive power, inductive
11 = Reactive power, capacitive
12 = Apparent power, export
13 = Apparent power, export
14 = Power factor cos phi, inductive
15 = Power factor cos phi, capacitive

*2) The 0 means limit off while 1 means limit on